CONVERTING MADE EASY

# INTRODUCING DC350

## Compact with even more features

**Grafisk Maskinfabrik A/S**
Bregnerødvej 92, 3460 Birkerød, Denmark
**Phone** +45 4581 2300

**Email** gm@gm.dk
**Web** www.gm.dk

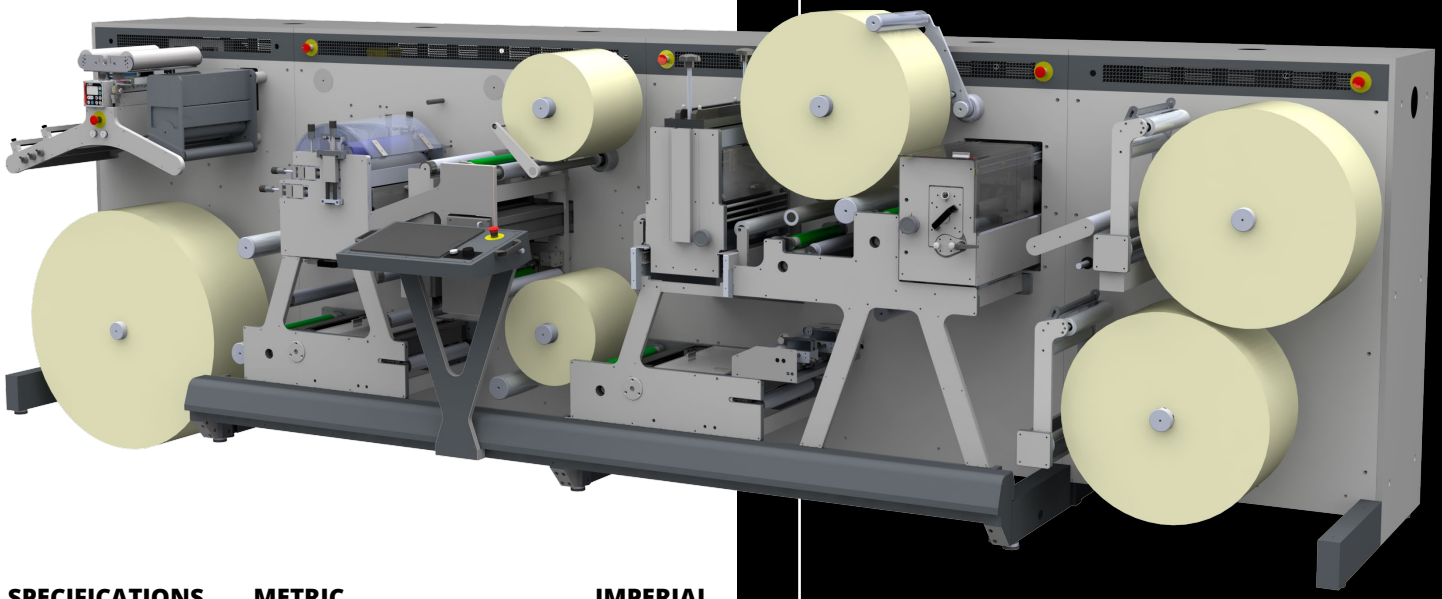

| SPECIFICATIONS | METRIC | IMPERIAL |
|---|---|---|
| Web width | 200 – 350 mm | 7.9 – 13.8” |
| Substrate | 50 – 200 µm | |
| **DIE STATION** | | |
| Semi-rotary speed | 72 m/min | 236 ft/min |
| Full-rotary speed | 90 m/min | 295 ft/min |
| Die plate size | 50,8 x 558,8 mm | 2 - 22” |
| **REWINDER** | | |
| Diameter max. | Ø700 mm | 27.6" |
| Core diameter | 25,4 – 152,4 mm | 1 – 6" |
| **UNWINDER** | | |
| Diameter max. | Ø1000 mm | 39.4" |
| Core diameter | 76,2 mm | 3" |
| Unwind max. weight | 350 Kg | 770 lbs |
| **FLEXO STATION** | | |
| Print cylinder size | Ø228,6 – 482,6 mm | 9 –19” |
| Spot varnish option with registration and slow run | | |
| **SLITTING STATION** | | |
| Knife type | Pneumatic crush, shear or razor | |
| Min. distance crush | 12,7 mm | 0.5" |
| Min. distance shear | 10 mm | 0.4" |
| **POWER/AIR** | | |
| Power / Air | 3x 400V+N+PE, 32A, 6 bar | |
| Dimensions (WxDxH) | 5,4 x 1,8 x 1,7 m | |
| Exhaust | Ø100 mm, 800 $m^3$/h. Outside. | |

The **NEW DC350**. Grafisk Maskinfabrik (GM) has launched a new premium finishing line – the **DC350**.

Get the best in fast and automated converting. Built with semi-rotary in varnish and die cutting as standard. Upgrade with value options like multilayer labels and laser die cutter.

**Take your factory to the industry 4.0 level**

This machine combines development work with proven product features. High speed, semi-rotary varnish, job automation and finally in-line compatible with all major digital press.

The NEW DC350 definitely sets a new benchmark in the label world.

- ✓ NEW platform fully modular for added flexibility
- ✓ Jumbo roll unwinder with integrated roll lift
- ✓ Semi-rotary flexo
- ✓ GM SmartLam Multilayer option
- ✓ GM Automatic Slitting Station option
- ✓ GM Turret option
- ✓ STORCK Rotary Screen option for tactile labels
- ✓ Web-advance for fast roll change
- ✓ Runs inline with GM flat bed hotfoil unit
- ✓ Fully customizable and upgradeable
- ✓ Easy web access and maintenance

*“Converting made easy”*

Specifications and terms are subject to change without notice. Grafisk Maskinfabrik is a registered trademark. All other product and brannames are trademarks and/or registered trademarks of their respective companies. GM disclaims any and all rights in these marks. Copyright 2017, Grafisk Maskinfabrik A/S **For more information, please visit www.gm.dk**

CONVERTING MADE EASY

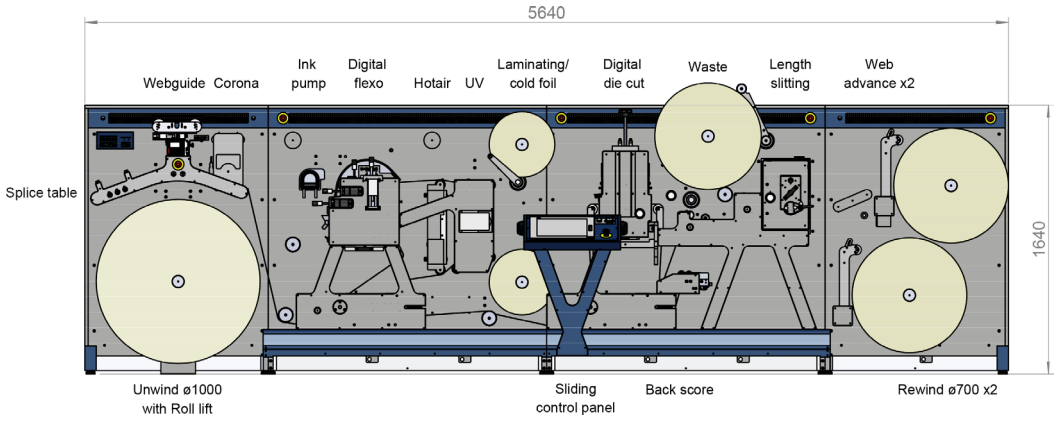


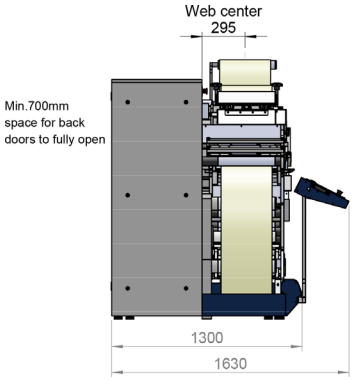


**Main power:**
**3x 400V 32A N+PE 350mA RCCB**
**Air supply: 6 bar ø8 tubing**

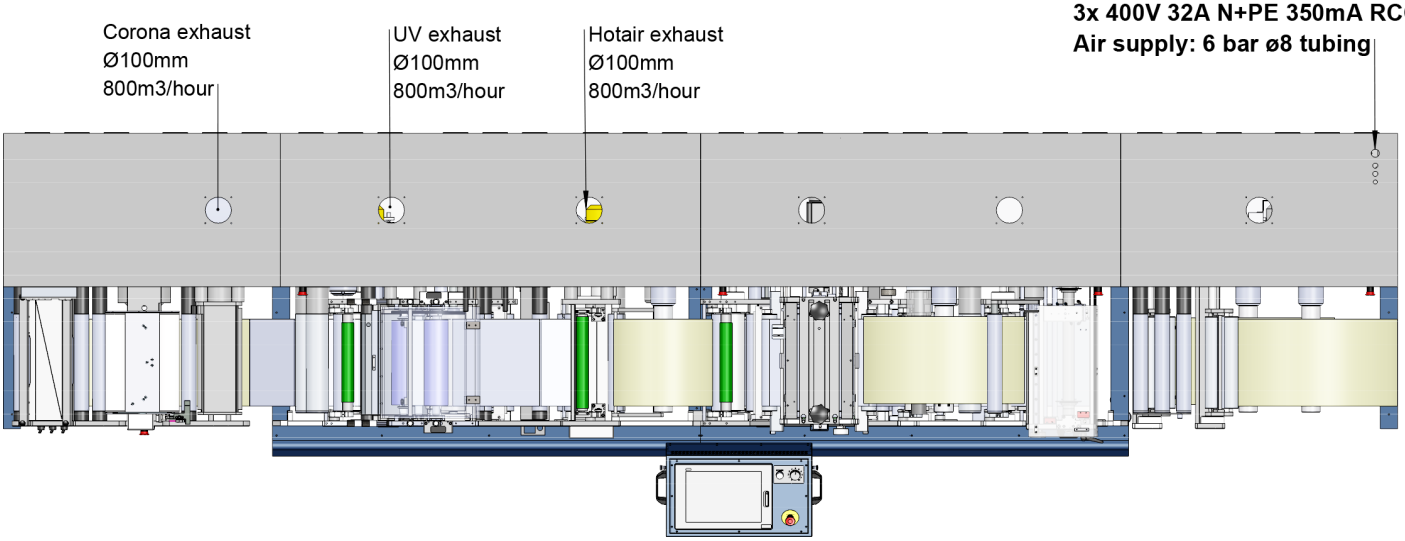

The compact SmartLam option allows for efficient production of multi-layer labels using in-register lamination.

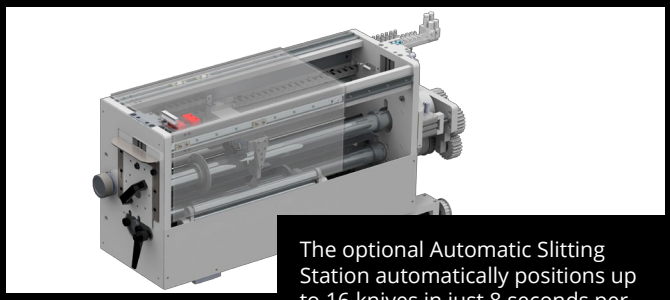

The optional Automatic Slitting Station automatically positions up to 16 knives in just 8 seconds per knife, saving valuable time on short run jobs.

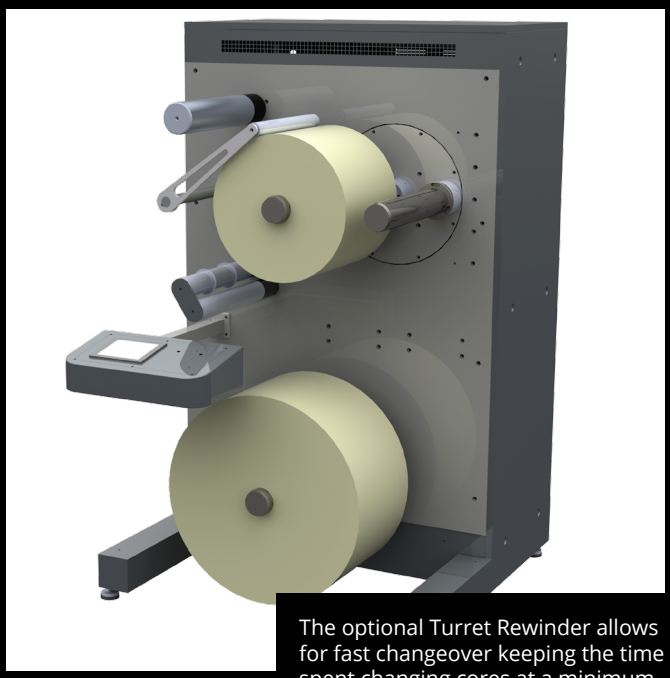

The optional Turret Rewinder allows for fast changeover keeping the time spent changing cores at a minimum.

**Grafisk Maskinfabrik A/S**
Bregnerødvej 92, 3460 Birkerød, Denmark
**Phone** +45 4581 2300

**Email** gm@gm.dk
**Web** www.gm.dk

*"Converting made easy"*

Specifications and terms are subject to change without notice. Grafisk Maskinfabrik is a registered trademark. All other product and brannames are trademarks and/or registered trademarks of their respective companies. GM disclaims any and all rights in these marks. Copyright 2017, Grafisk Maskinfabrik A/S **For more information, please visit www.gm.dk**